Aviator Pinwheel

10'w × 36"h **OUTSIDE** (×3)

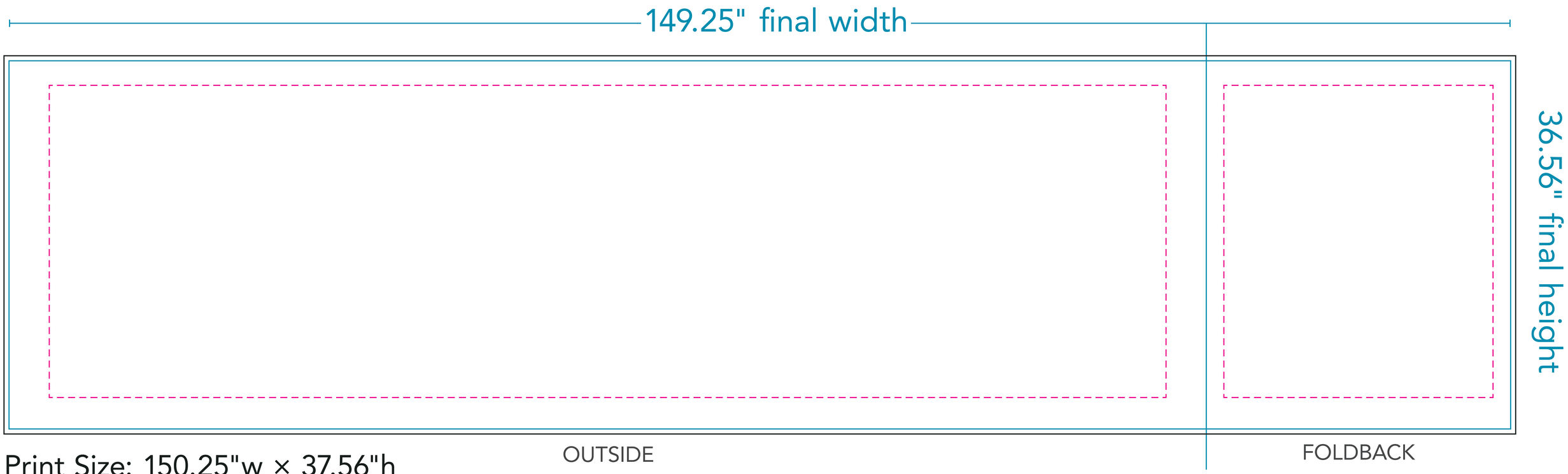

Print Size: 150.25"w × 37.56"h
Final Size: 149.25"w × 36.56"h
Live Area: 111"w × 31"h (outside)
26.75"w × 31"h (foldback)

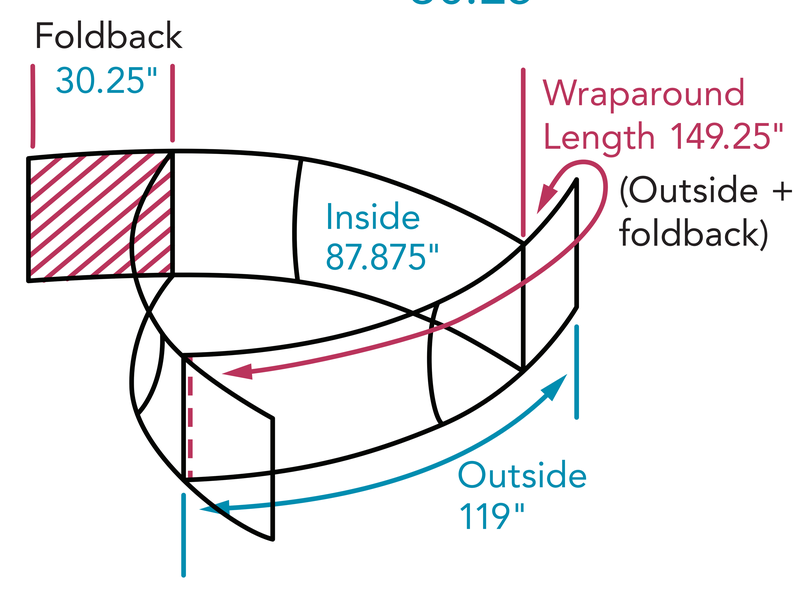

File Preparation Tips

- Design artwork to print size listed
- Submit layered files in their native program
  (Photoshop, Illustrator and InDesign are compatible programs)
- Supply all image links to ensure quality
- Keep resolution of images at a minimum 100 ppi
  (View document at print size to preview image quality)
- Include fonts for any live text OR convert text to outlines
- Maintain a consistent colorspace in artwork and links
- Keep Pantone colormatches indicated as spot colors

Aviator Pinwheel

10'w × 36"h **INSIDE** (×3)

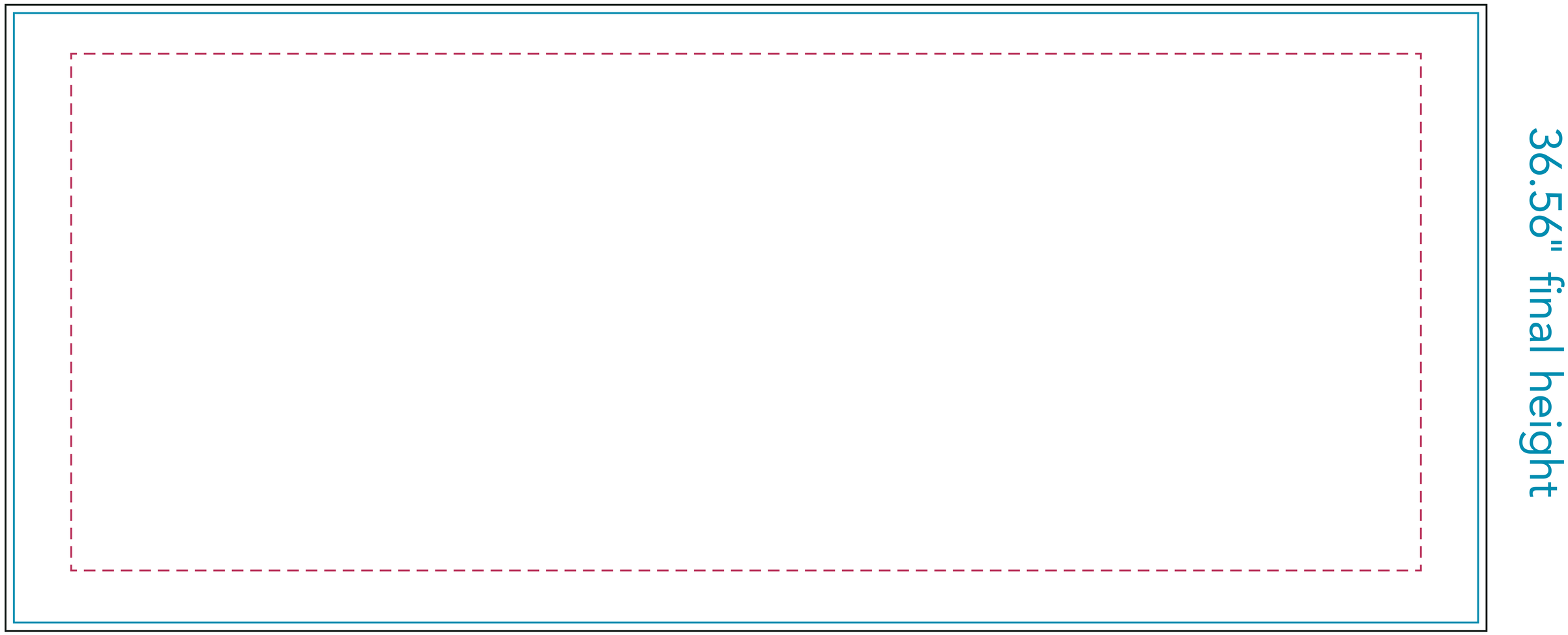

Print Size: 88.875"w × 37.56"h
Final Size: 87.875"w × 36.56"h
Live Area: 81"w × 31"h

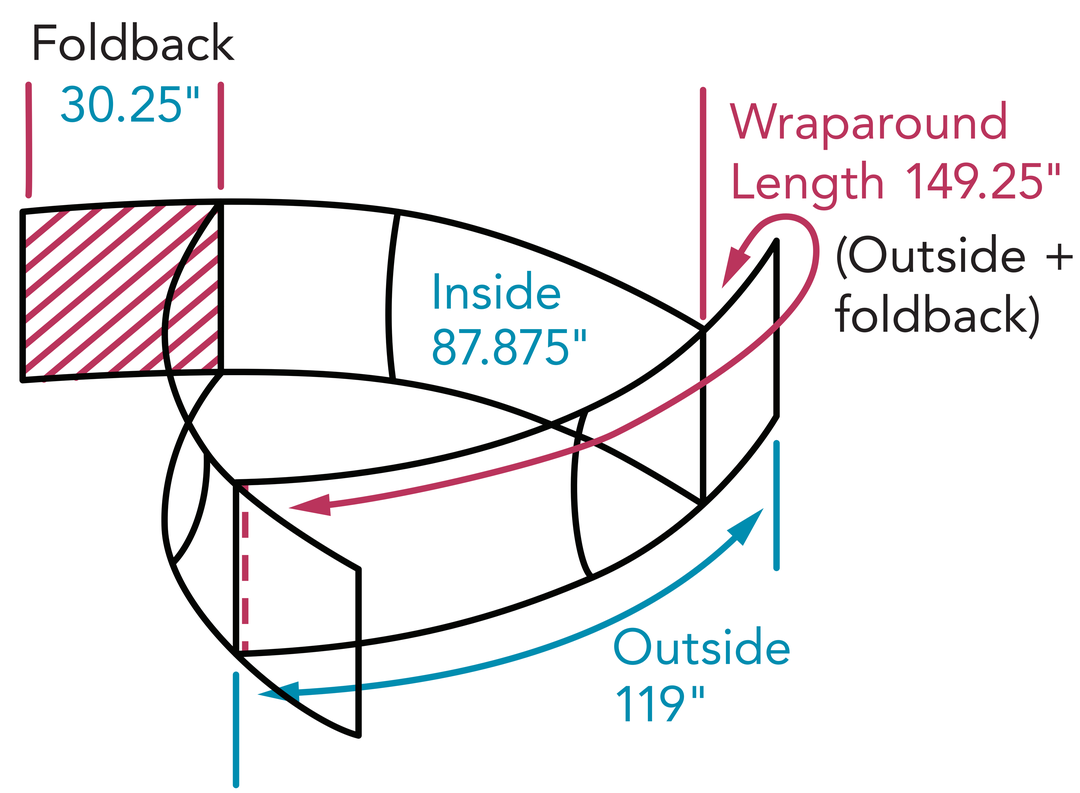

File Preparation Tips

- Design artwork to print size listed
- Submit layered files in their native program
  (Photoshop, Illustrator and InDesign are compatible programs)
- Supply all image links to ensure quality
- Keep resolution of images at a minimum 100 ppi
  (View document at print size to preview image quality)
- Include fonts for any live text OR convert text to outlines
- Maintain a consistent colorspace in artwork and links
- Keep Pantone colormatches indicated as spot colors