# Aviator Pinwheel

## 10'w × 48"h **OUTSIDE** (×3)

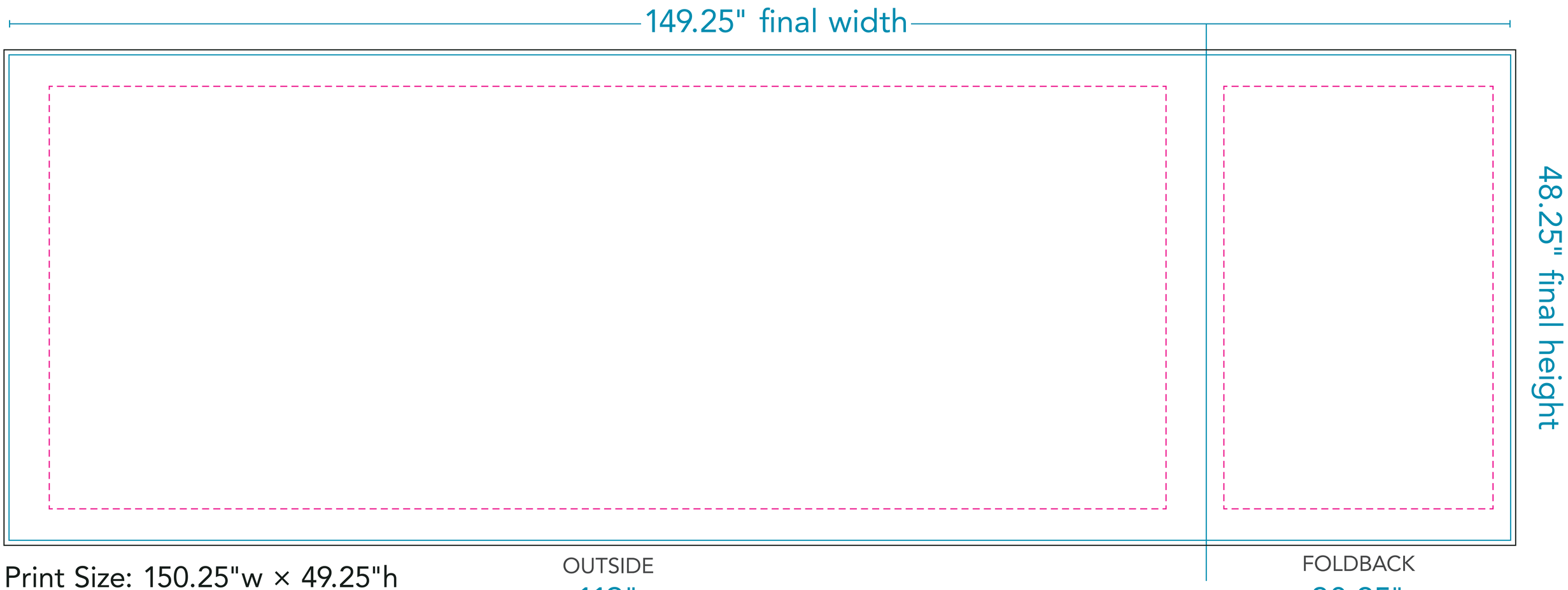


Print Size: 150.25"w × 49.25"h
Final Size: 149.25"w × 48.25"h
Live Area: 111"w × 42"h (outside)
26.75"w × 42"h (foldback)

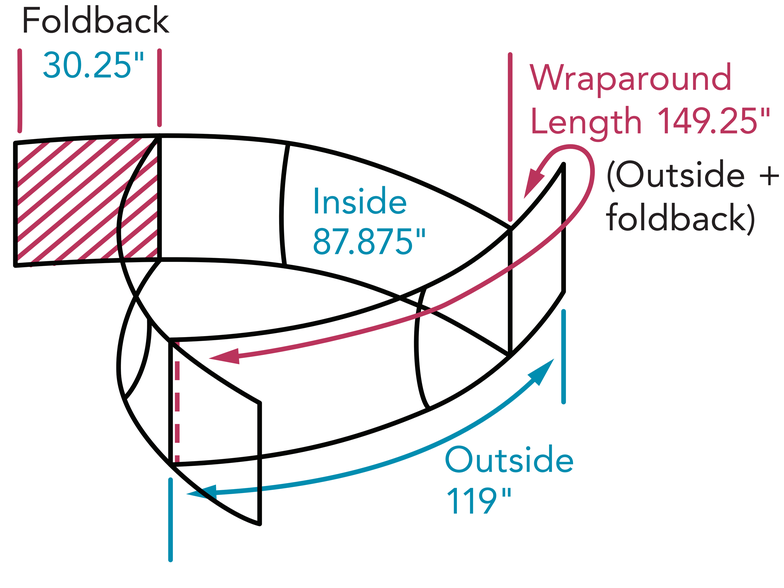


## File Preparation Tips

- Design artwork to print size listed
- Submit layered files in their native program
  (Photoshop, Illustrator and InDesign are compatible programs)
- Supply all image links to ensure quality
- Keep resolution of images at a minimum 100 ppi
  (View document at print size to preview image quality)
- Include fonts for any live text OR convert text to outlines
- Maintain a consistent colorspace in artwork and links
- Keep Pantone colormatches indicated as spot colors

# Aviator Pinwheel

## 10'w × 48"h **INSIDE** (×3)

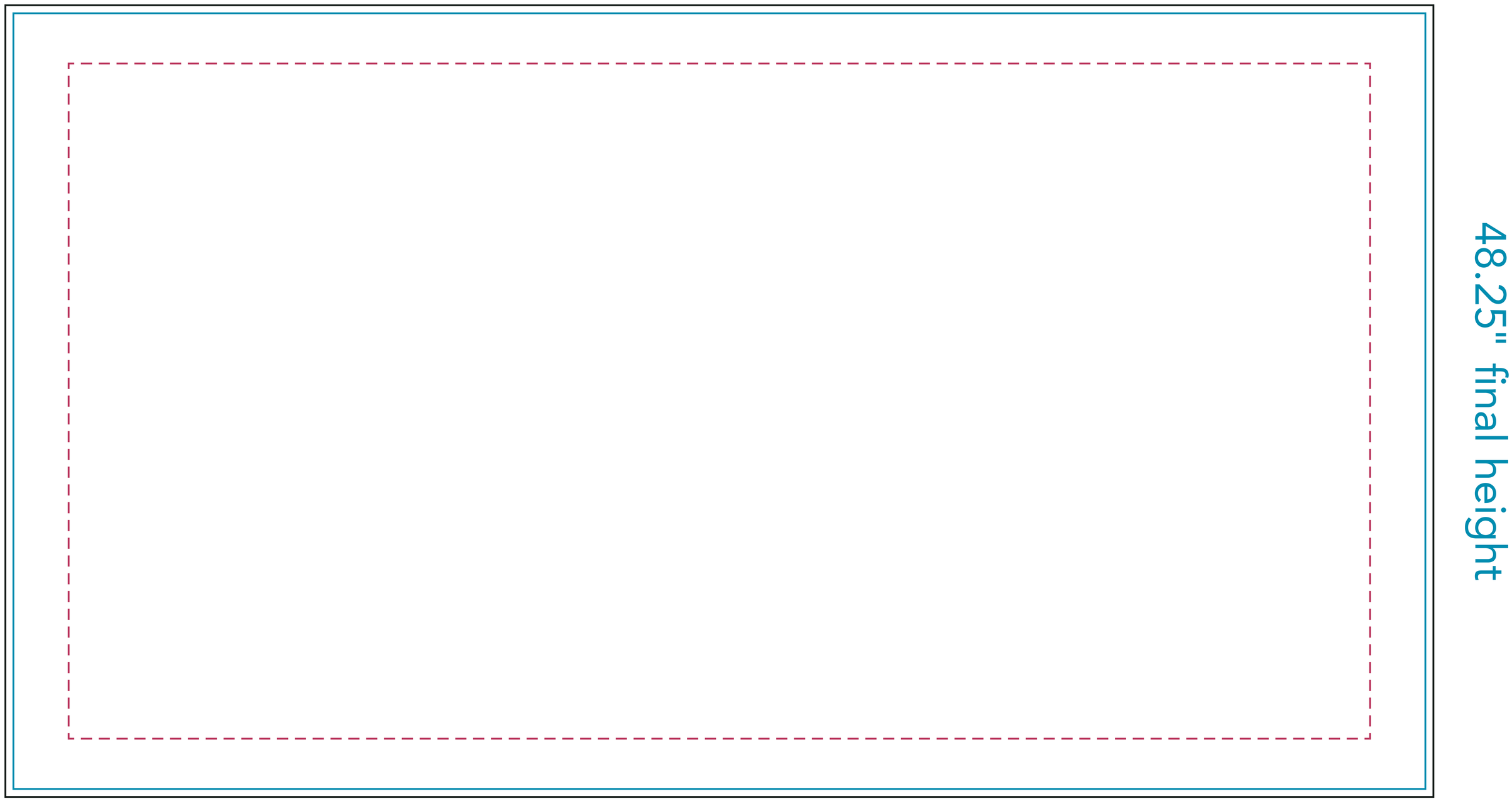


Print Size: 88.875"w × 49.25"h
Final Size: 87.875"w × 48.25"h
Live Area: 81"w × 42"h

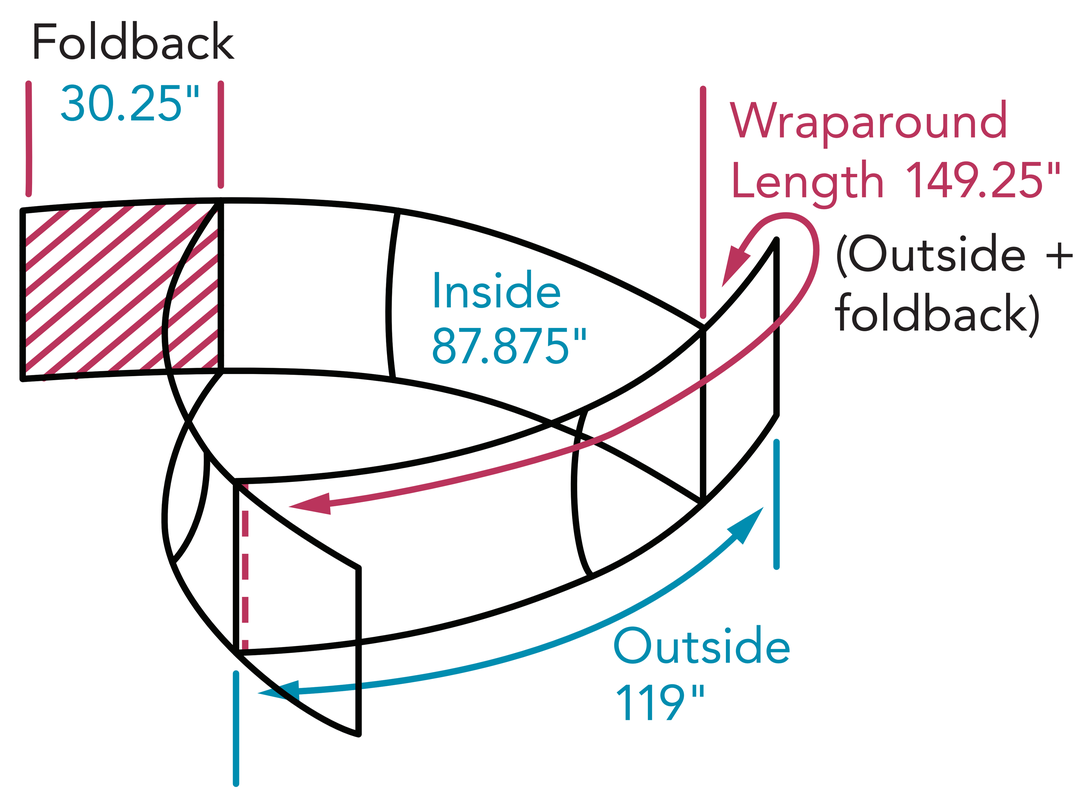


### File Preparation Tips

- Design artwork to print size listed
- Submit layered files in their native program
  (Photoshop, Illustrator and InDesign are compatible programs)
- Supply all image links to ensure quality
- Keep resolution of images at a minimum 100 ppi
  (View document at print size to preview image quality)
- Include fonts for any live text OR convert text to outlines
- Maintain a consistent colorspace in artwork and links
- Keep Pantone colormatches indicated as spot colors